41 REVENUE POLICY

File Reference No:	26.160.1, 26.160.2, 26.160.3, 26.160.4
Strategic Outcome:	Good government
Date of Adoption:	18/05/2016
Date for Review:	30/06/2017
Responsible Officer:	Director Corporate Services

1. POLICY STATEMENT

Clause 201 of the *Local Government (General) Regulation* 2005 requires Berrigan Shire Council to prepare an annual statement of the Council's revenue policy

This policy provides information regarding the levying of Council's rates, its fees and charges and other major income sources.

Rates and charges provide Council with a major source of revenue to meet the cost of providing services to residents of the Shire.

2. PURPOSE

The rates and charges described below are levied to provide the net funding requirements of the programs and initiatives identified in the Management Plan.

3. SCOPE

This policy covers the setting and levying of all Council rates, charges and fees for the financial year ending 30 June 2017

4. OBJECTIVE

This policy is developed to assist the Council with the following Delivery Plan Objectives:

2.2.2 Council operations support ethical, transparent and accountable corporate governance.

5. POLICY IMPLEMENTATION

Total revenue raised from the levying of land rates continues to be capped by the State Government with the Independent Pricing & Regulatory Tribunal (IPART) having developed a Local Government Cost Index (LGCI) for use in setting the maximum allowable increase in general income for local government. IPART has set the maximum allowable increase as 1.8% for the 2016/17 rating year.

5.1 Ordinary Rates

Section 494 of the *Local Government Act* 1993 (LGA), requires Council to make and levy an Ordinary rate for each year on all rateable land in the local government area.

Ordinary rates are applied to properties based on applying an ad Valorem Rate-in-$ to the independent land valuations provided by the NSW Department of Lands (Valuer General's Office).

Council is required to use the latest valuations received up until 30 June of the previous year for rating purposes in the current financial year. Shire-wide general revaluations are undertaken every 3 years.

Valuations, with a base date 01/07/2013, will be used for rating purposes for 01/07/2016 – 30/06/2017.

In accordance with Section 493 and 514 of the Local Government Act 1993, all parcels of rateable land within Councils boundaries have been declared to be within one of the following categories:

- Farmland
- Residential
- Business
- Mining

The determination of the sub category for each parcel of rateable land is in accordance with the definitions set out in Sections 515, 516, 517, 518, 518A, 519 and 529 of the *Local Government Act* 1993.

The applicable subcategories for each category are as follows:

5.1.1 Farmland subcategories

Farmland – Berrigan

Farmland – Barooga
Farmland – Finley
Farmland – Tocumwal
Farmland – Gravel Pits

5.1.2 Residential subcategories

Residential
Residential – Barooga
Residential – Berrigan
Residential – Finley
Residential – Tocumwal
Residential Rural – Barooga
Residential Rural – Berrigan
Residential Rural – Finley
Residential Rural – Tocumwal
Residential – River Land Barooga
Residential – River Land Tocumwal

5.1.3 Business subcategories

Business Ordinary – Barooga
Business Ordinary – Berrigan
Business Ordinary – Finley
Business Ordinary – Tocumwal
Business Industrial – Berrigan
Business Industrial – Finley
Business Industrial – Tocumwal
Business Industrial – Barooga
Business Hospitality – Berrigan
Business Hospitality – Barooga
Business Hospitality – Finley
Business Hospitality – Tocumwal
Business Rural – Barooga
Business Rural – Berrigan
Business Rural – Finley
Business Rural – Tocumwal

5.1.4 Mining subcategories

Mining – Berrigan
Mining – Barooga
Mining – Finley
Mining – Tocumwal

5.1.5 Rating scenario

The ordinary rates proposed by the Council for 2016-2017 contain a 1.8% increase, which is the increase determined by the Independent Pricing and Regulatory Tribunal (IPART).

The Ordinary rates table below illustrates the proposed rating scenario for Berrigan Shire Council. This information is based on the rating database up to June 2016.

FARMLAND

The Farmland rate is sub-categorised into regional districts, based on the urban/town locations. The farmland rate will be one ad Valorem rate shire wide.
Farmland – Ad Valorem Rate = $0.006495 cents in the dollar, based on the 2013 unimproved capital value of the property.

Estimated Total Yield of Farmland = $1,813,660.00

(Farmland = 36.73% of the total yield)

RESIDENTIAL – BAROOGA

The Residential rate for Barooga is worked out on the basis that the average valued property in Barooga will pay the same as the average valued property in each town in the Shire. The Residential category may apply if the land is zoned or designated for residential purposes
Residential Barooga – Ad Valorem Rate = $0.011061 cents in the dollar, based on the 2013 unimproved capital value of the property.

Estimated Total Yield of Residential Barooga = $525,967.00

BUSINESS – BAROOGA

Land is categorised as Business-Barooga if it is of a business, commercial or industrial nature. Business- Barooga has four sub-categories: Business Industry, Business Ordinary, Business Hospitality and Business Rural Each category has the same ad Valorem as Residential Barooga.

Business Barooga – Ad Valorem + 0.011061 cents in the dollar, based on the 2013 unimproved capital value of the property

Estimated total yield of Business Barooga = $92,868.00

(Residential and Business Barooga = 12.53% of the total yield)

RESIDENTIAL – BERRIGAN

The Residential rate for Berrigan is worked out on the basis that the average valued property in Berrigan will pay the same as the average valued property in each town in the Shire. The Residential category may apply if the land is zoned or designated for residential purposes.

Residential Berrigan – Ad Valorem Rate = 0.036237 cents in the dollar, based on the 2013 unimproved capital value of the property.

Estimated total yield of Residential Berrigan = $327,542.00

BUSINESS – BERRIGAN

Land is categorised as Business-Berrigan if it is of a business, commercial or industrial nature. Business- Berrigan has four sub-categories: Business Industry, Business Ordinary, Business Hospitality and Business Rural. Each category has the same ad Valorem as Residential Berrigan.

Business Berrigan – Ad Valorem + 0.036237 cents in the dollar, based on the 2013 unimproved capital value of the property.

Estimated total yield of Business Berrigan = $71,960.00

(Residential and Business Berrigan = 8.09% of the total yield)

RESIDENTIAL – FINLEY

The Residential rate for Finley is worked out on the basis that the average valued property in Finley will pay the same as the average valued property in each town in the Shire. The Residential category may apply if the land is zoned or designated for residential purposes.

Residential Finley – Ad Valorem = $0.030318 cents in the dollar, based on the 2013 unimproved capital value of the property.

Estimated total yield of Residential Finley = $654,658.00

BUSINESS - FINLEY

Land is categorised as Business-Finley if it is of a business, commercial or industrial nature. Business- Finley has four sub-categories: Business Industry, Business Ordinary, Business Hospitality and Business Rural. Each category has the same ad Valorem as Residential Finley.

Business Finley – Ad Valorem + $0.030318 cents in the dollar, based on the 2013 unimproved capital value of the property.

Estimated total yield of Business Finley = $163,927.00

(Residential and Business Finley = 16.58% of the total yield)

RESIDENTIAL – TOCUMWAL

The Residential rate for Tocumwal is worked out on the basis that the average valued property in Tocumwal will pay the same as the average valued property in all towns shire wide. The Residential category may apply if the land is zoned or designated for residential purposes
Residential Tocumwal – Ad Valorem Rate = 0.012413 cents in the dollar, based on the unimproved capital value of the property.

Estimated total yield of Residential Tocumwal = $704,712.00

Land is categorised as Business-Tocumwal if it is of a business, commercial or industrial nature. Business-Tocumwal has four sub-categories: Business Industry, Business Ordinary, Business Hospitality and Business Rural. Each category has the same ad Valorem as Residential Tocumwal

Business Tocumwal – Ad Valorem + 0.012413 cents in the dollar, based on the 2013 unimproved capital value of the property.

Estimated total yield of Business Tocumwal = $196,907.00

(Residential and Business Tocumwal = 18.26% of the total yield)

RESIDENTIAL RURAL

The Residential Rural rate is a Residential sub-category and is based on the criteria provided by the LGA, it usually located outside a town category. The ad Valorem is less to reflect less use of town facilities. The ad Valorem is the same across the shire.

Residential Rural – Ad Valorem = $0.006789 cents in the dollar, based on the 2013 unimproved capital value of the property.

Total yield of Residential Rural = $331,512.00

(Residential Rural = 6.71% of the total yield)

RESIDENTIAL – Riverland Tocumwal & Riverland Barooga

This is a sub-category of Residential and is for semi-rural properties that may not strictly fit Residential or Rural Residential criteria and will generally be less than the adjoining towns' rate.

Residential – Ad Valorem = $0.0083995 cents in the dollar, based on the 2013 unimproved capital value of the property.

Total Yield of Residential = $54,446.00

(Residential = 1.10% of the total yield)

5.2. Annual service and utility charges

5.2.1 Domestic Waste and Non-Domestic Waste Management Services

Berrigan Shire Council intends to make the following charges for levying in 2016-2017 to meet the reasonable costs associated with the collection, disposal and recycling of waste in accordance with Sections 496, 501 and 504 of the *Local Government Act* 1993. Berrigan Shire Council will levy annual charges for the following services:

2016/17 WASTE MANAGEMENT SERVICE CHARGES

SERVICE PROVIDED	2016/17 FEE ($) PER ANNUM	ESTIMATED REVENUE 2016/17	% VARIATION
Domestic Waste Collected **1 x Weekly Pick up of 120 litre small garbage bin (Green)** **1 x Fortnightly pick up 240 litre recycling bin (Blue)**	$272.00	$869,312	**2.5%**
Additional Service Collected **1 x Weekly Pick up of 120 litre small garbage bin (Green)**	$182.00	$1,092	**2.5%**

Uncollected (vacant charge) **Charged on vacant land within the collection zone – no service is provided.**	$54.00	$15,174	**2.5%**
Business / Non Residential Garbage Charge **1 x Weekly pick up of 240 litre big bin. (Green)**	$255.00	$62,985	**2.5%**
Garbage and Recycling Charge **1 x Weekly pick up of 240 litre big garbage bin. (Green)** **1 x Fortnightly pick up of 240 litre recycling bin. (Blue)**	$375.00	$8,250	**2.5%**
Recycling Collected **1 x Fortnightly pick up of 240 litre recycling bin. (Blue)**	$121.00	$3,267	**2.5%**

5.2.2 Sewer Charges

In accordance with the provisions of Section 535, 501 and 552 of the *Local Government Act* 1993, a special rate or charge relating to sewerage will be levied on all rateable land confined within the area shown on each of the Town Sewer Supply areas except:
i) Land which is more than 75 metres from a sewer of the Council and is not connected to the sewer;
ii) Land from which sewerage could not be discharged into any sewer of the Council.

Berrigan Shire Sewerage will operate as one entity and each rateable property in Barooga, Berrigan, Finley and Tocumwal will have the same sewerage supply charge applied as specified in Council's Annual Fees and Charges. In addition, a standard pedestal charge per cistern/water closet in excess of two will be raised on all rateable properties with more than 2 cisterns/water closets.

In special circumstances, an on-site low pressure sewer maintenance charge will apply to those properties connected to Council's sewer supply via a low-pressure sewer pump. The Council will maintain the pump in perpetuity subject to the owner of the property entering into an agreement for maintenance and paying the annual low-pressure charge.

These charges are specified in Council's Annual Fees and Charges.

-**For non-rateable properties**

A standard pedestal charge per cistern/water closet will be raised on all non-rateable properties connected to the sewerage supply.

-***For rateable properties outside village boundaries***

Rateable properties outside the existing village boundaries, and connected to the town sewer supply, will be charged the normal town sewer supply charges, including pedestal charges if applicable.

The Table below sets out the intended sewer charges for 2016/17:

2016/17 SEWER CHARGES

SERVICE PROVIDED	FEE PER ANNUM	ESTIMATED REVENUE	% VARIATION
Sewer Supply Charge **Charged to all rateable land utilising the town sewer system or zoned residential and within 75m of Councils sewer system.**	$513.00	$1,755,400	**2.5%**
Pedestal Charge **Any property with more than 2 (two) cisterns/water closets will be charged a pedestal charge per excess cistern/water closet.** **A pedestal charge per cistern/water closet will be raised on all non-rateable properties connected to the sewer supply**	$109.00	$158,000	**2.5%**
On-Site Low Pressure Maintenance Charge **Applied to properties connected to Councils' sewerage supply via a low-pressure pump. Council maintains the pump in perpetuity subject to the owner paying the On-site low pressure maintenance charge.**	$95.00	$8,000	**2.5%**

5.2.3 Stormwater Management Services

Under the provisions of Section 535 of the L*ocal Government Act* 1993, Council has resolved to levy a Stormwater Management Services Charge in accordance with Sections 496A of the *Local Government Act*, and clause 125A and clause 125AA, of the *Local Government (General) Regulation* 2005

This charge will be applicable for each non-vacant urban property, or all eligible properties for which the works or service is either provided or proposed to be provided.

2016/17 STORMWATER MANAGEMENT SERVICES

SERVICE PROVIDED	FEE PER ANNUM	% VARIATION
Residential Premises on urban land	$25.00	**0%**
Strata properties (per Strata)	$12.50	**0%**
Vacant land	Exempt	**0%**
Commercial Premises on urban land	$25.00	**0%**
Other	$25.00	**0%**

Total Estimated Yield for Stormwater Management 2016/17 - $72,000.00

5.2.4 Water Supply Charges

In accordance with the provisions of Section 501, 502, 535 and 552 of the Local Government Act 1993, Council has resolved that water supply charges be levied on all properties that

i) Land that is supplied with water from a water pipe of the Council; or

ii) Land that is situated within 225 metres of a water pipe of the Council, whether the land has a frontage or not to the public road (if any) in which the water pipe is laid, and confined within the area shown on each of the Town Water Supply areas, even though the land is not actually supplied with water from any water pipe of the Council;

subject to, water being able to be supplied to some part of the land from a standpipe at least 1 metre in height from the ground level, if such a pipe were laid and connected to Council's main.

Except for those non-rateable properties described below:

Non-rateable State Government properties of non-commercial nature without a water connection and not using the service will not be levied an annual fixed Water Access Charge.

2016/17 WATER ACCESS AND CONSUMPTION CHARGES

SERVICE PROVIDED	FEE PER ANNUM	ESTIMATED REVENUE 2016/17	% VARIATION
Water Access Charge **Applied to all properties supplied with water from a water pipe of the Council or land that is situated within 225m of Councils' water supply pipes. (see Appendix A)**	$510.00	$1,958,000	**2.5%**
Water Consumption Charges – Unfiltered (Barooga, Berrigan & Finley)	**$0.73 per kl** (stage 4 restrictions in force) **$0.52 per kl** (other restrictions in force) **$0.47 per kl** (no restrictions)		**0%**
Water Consumption Charges – Treated (Barooga, Berrigan & Finley)	**$1.46 per kl** (stage 4 restrictions in force) **$1.04 per kl** (other restrictions in force) **$0.94 per kl** (no restrictions)		**0%**
Water Consumption Charges – Treated (Tocumwal)	**$0.97 per kl** (stage 4 restrictions in force) **$0.69 per kl** (other restrictions in force) **$0.62 per kl** (no restrictions)		**0%**

Water meter reads are scheduled four (4) times a year with payment generally required thirty days (30) after the issue date of the account.

5.3. Payment of Rates and Service Charges

5.3.1 Payment and due dates

Berrigan Shire rates and charges are payable in full or by quarterly instalments in accordance with Section 562 of the *Local Government Act* 1993.

Annual Rates and charges notices are issued in July each year and are payable in four (4) instalments on 31 August, 30 November, 28 February and 31 May.

A rate notice, or rate instalment notice, is issued thirty (30) days before each instalment is due.

Water Consumption Notices are issued on a quarterly basis, approximately 30 days before the charge is due for payment.

Council may agree to enter into a payment plan with a person. The amount and frequency of the payments under the agreement are required to be acceptable to Council.

Council requires all ratepayers to pay their rates in full by the due date(s). However, some ratepayers experience genuine financial hardship and may consequently request Council to consider alternative arrangements in respect of the timing of their rate payments.

Such requests must be made prior to any recovery action being undertaken, including legal action.

5.3.2 Concessions

i) Pensioner Concessions

Section 575 of the *Local Government Act* 1993, provides for concessions on Council rates and charges for eligible pensioners. By virtue of Section 575, an eligible pensioner may apply to Council for annual concessions on a rate or charge of:

- Up to $250.00 on all ordinary rates and charges for domestic waste management services
- Up to $87.50 on annual water charges.
- Up to $87.50 on annual sewer charges

Applications for concessions must be made in writing using the appropriate form available from Council's Rates Department.

The Council believes that the concession rates set by the NSW State Government are adequate, equitable and require no additional concession to be offered by the Council

ii) Developer Concessions

Council may offer incentives in the form of rating waivers relative to annual water and sewerage charges to developers involved with multi-lot subdivisions. Applications for developer concessions are as follows:

- Written application should be submitted to the Council prior to 31st May for consideration at the June Meeting.
- Annual water and sewerage charges may be waived on the undeveloped lots of a subdivision, up to a maximum period of three (3) years, or until the lots are built upon, sold, leased or otherwise occupied (whichever is the sooner).
- No concessions under this section are given for Domestic Waste, Storm water, Pedestal or Water Consumption Charges.

5.3.3 Hardship Provisions

Ratepayers having difficulty meeting their commitments may be eligible for assistance and consideration.
All applications for assistance and consideration will be assessed as per the Council's adopted Hardship Policy.

5.34 Recovery of Rates and Charges, Including Water Consumption Charges

i) Reminder Notices

- If an instalment or charge is not paid within seven (7) days of the instalment or payment date, a reminder letter will be issued requesting payment within fourteen (14) days.
- If the debt remains unpaid after this time, a final notice will be issued giving seven (7) days to pay

ii) Recovery Action – Referral to Debt Collection Agency

- Following the seven (7) days specified, the Council will, by registered mail, issue a letter advising the ratepayer that debt recovery action will be implemented within seven (7) days.

- If an instalment or charge amount of current defaulters are less than $300.00, initial external recovery action may be deferred until outstanding amounts

reach this amount, however this will be at the discretion of the Revenue Officer.

iii) Recovery Action – Debt Collection Agency Procedures

- The debt collection agency will as soon as possible, after receipt of the referral from the Council, issue a Final Notice in relation to each overdue amount advising that the Council has referred the debt to the agency for collection and that payment is required.

- Following the expiration of the payment period, the debt collection agency will issue a solicitor's letter.

- Legal proceedings will then be commenced if these notices or letters are disregarded, or if arrangements are not adhered to, with the approval of the Revenue Officer.

Note 1: Legal action procedures will be undertaken within the guidelines of the Uniform Civil Procedure Rules and the NSW *Local Government Act*. All costs associated with debt recovery will be charged to the debtor. All costs awarded by the Court will be levied as a charge against the land.

Note 2: If legal action is commenced and costs incurred prior to a debtor applying under the Hardship Provisions, then such costs will be charged to the debtor and shall not be waived, unless under the direction of the General Manager.

iv) Arrangements to Repay Rates and Charges

- A ratepayer may enter into a weekly, fortnightly or monthly arrangement to repay the rates and charges with the Council or Council's debt collection agency with a view that the arrangement will have rates and charges paid in full within twelve (12) months. Normal interest charges apply to these arrangements.
- Council's Rates Department may enter into a longer term repayment arrangement if in their opinion a ratepayer's financial circumstances warrant this. Normal interest charges apply to these arrangements.

- Ratepayers are to be advised at the time of making a repayment arrangement that if an arrangement is dishonored or changed without prior Council approval, then recovery action may commence without further notice.

v) Interest Charges

The Council increases overdue rates by the maximum allowable in accordance with Section 566 of the *Local Government Act* 1993.

Council may write off interest charges on overdue rates, in accordance with Section 567 of the *Local Government Act* 1993. Ratepayers seeking to have interest written off under hardship provisions are to submit a written application to Council's Rates Department.

vi) Sale of Property for Overdue Rates

Under Section 713 of the *Local Government Act* 1993, the Council may:

- Sell any land (including vacant land) on which any rate or charge has remained unpaid for more than five (5) years from the date on which it became payable.

- Sell any vacant land on which any rate or charge has remained unpaid for more than one year, provided that the amount of such rates and charges are more than the land valuation it received from the NSW Valuer-General.

- Any sale will be carried out by public auction in accordance with the process outlined in the *Local Government Act* 1993.

5.4. User Fees and Charges

5.4.1 Fee and Charge Setting Principles

Where legally possible, the Council intends to charge users for the provision of all goods and services that it provides.

As a general rule the Council will set its fees and charges at a rate to generate the maximum amount of revenue possible to offset the cost burden of the provision of services borne by other sources of revenue such as rates and untied grants.

Therefore, the Council will at a minimum seek to recover the full cost of service provision from its customers and clients.

This general principle will only be modified where the specific fee and charge setting principles as shown below apply.

Efficiency: the fees are simple and not cumbersome to administer
Legality: the fees are set in line with legislation and/or other legal restrictions.
Transparency: the nature and use of the service is understood by users
Effectiveness: the fees provide value for money for users
Clarity: users are clear about when & how fees apply
Equity: the fees are fairly applied across a range of users
Ethics: users with special service needs are not charged exorbitant fees directly in accord with the cost of higher servicing requirements

5.4.2 Fee setting rationales

Every fee or charge set by the Council will be based on a clear fee setting rationale. This rationale will be shown for each fee in the Fees and Charges Register.

The rationales applicable are as follows:

(A) Statute Limited – Priced at the figure stipulated by law as applicable to this activity
(B) Cost Recovery – Priced so as to return full cost recovery for the activities provided
(C) Commercial Basis – Priced to cover the cost of the item plus a commercial mark-up
(D) Community Service Obligation – Priced at below the cost of providing this activity as provision of the activity meets a social or economic objective of the Council.

The User Fees and Charges Policy Rationale Identifier (A, B, C etc.) will appear beside the various fees and charges in the Register of Fees and Charges. Where an asterisk appears next to the Policy ID (i.e. A*, B* etc.) the Council has identified that the maximum amount charged does not cover the cost to the Council of providing the service.

Where a fee or charge is shown as “ND”, the Council has chosen not to disclose this amount – in accordance with clause 201(4) of the *Local Government (General) Regulation* 2005 – as disclosure could confer a commercial advantage on a competitor of the Council.

5.4.3 Goods and Services Tax

The Council will use its best endeavours to determine the Goods and Services Tax (GST) status for each user fee and charge that it sets. However there may be fees and charges for which the Council is unable to confirm the GST status.

Accordingly, if a fee that is shown as being subject to GST is subsequently found not to be subject to GST, then that fee will be amended by reducing the GST to nil. Conversely, if the Council is advised that a fee which is shown as being not subject to GST becomes subject to GST, then the fee will be increased but only to the extent of the GST

5.4.4 Register of Fees and Charges

The complete Register of Fees and Charges is detailed in a separate document included in the 2016/17 Operational Plan.

5.5. Borrowings

The Council currently has three significant outstanding loans as summarised in the table below:

Outstanding Loans - 30 June 2016

PURPOSE	AMOUNT	TERM	RATE	ANNUAL REPAYMENTS	DUE	LENDER
Finley Reservoir	$1,000,000	10 y	6.770%	$137,973	April 2017	CBA
Tocumwal Drainage	$600,000	10 y	6.940%	$42,102	Dec 2016	BSC Sewer
LIRS Drainage	$1,630,000	10 y	4.260%	$200,488	Dec 2024	NAB

Loan Redemption - 2016/17 to 2019/20

FUND	2016 / 2017	2017 / 2018	2018/2019	2019/2020
General	$242,590	$200,488	$200,488	$200,488
Water	$114,977	$0	$0	$0
Sewer	$0	$0	$0	$0
Sub Total	357,567	$200,488	$200,488	$200,488
Less Int. Borrowing	(42,102)	-	-	-
TOTAL	$355,077	$200,488	$200,488	$200,488
Less LIRS subsidy	($38,031)	($34,112)	($30,065)	($25,774)
NETT COST	$317,046	$166,366	$170,423	$174,714

The external borrowings are both long term credit-foncier loans at fixed interest rates repayable by monthly instalments and secured against the Council's revenues.

The Local Infrastructure Renewal Scheme (LIRS) provides the Council a 3% per annum interest rate subsidy on eligible loans. For the LIRS drainage loan, this is between $25,000 and $38,000 per annum over the first four years. Claims are made six monthly.

The table above does not include any LIRS subsidy.

6. RELATED POLICIES OR STRATEGIES

6.1. Legislation

- *Local Government Act* 1993
- *Local Government (General) Regulation* 1994

6.2. Council policies and guidelines

- Berrigan Shire 2023 (Community Strategic Plan)
- Berrigan Shire Council Delivery Program
- Berrigan Shire Council Operational Plan
- User Fees and Charges Policy
- Hardship Policy

APPENDIX A

1. WHERE SINGLE SUPPLY IS AVAILABLE TO PROPERTY
(Tocumwal) – Not including proposed new subdivisions outside village boundary

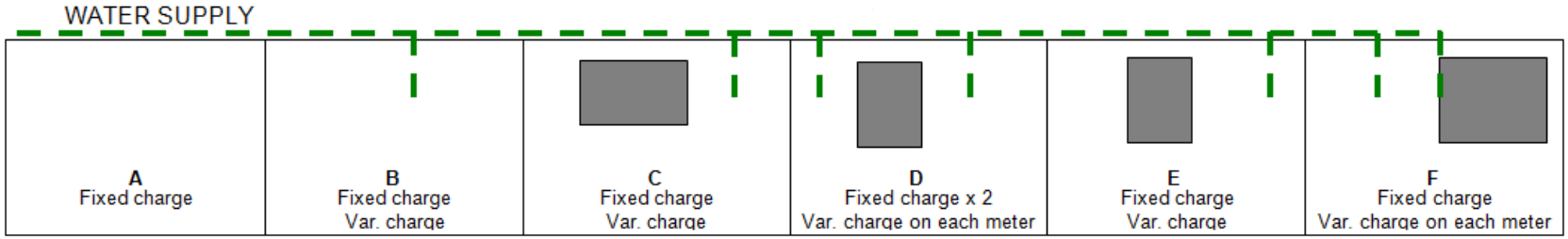

2. WHERE DUAL SUPPLY IS AVAILABLE TO PROPERTY (EXCEPT "H" – SINGLE AVAILABLE ONLY)
(Barooga, Berrigan and Finley) – Not including proposed new subdivisions outside village boundary

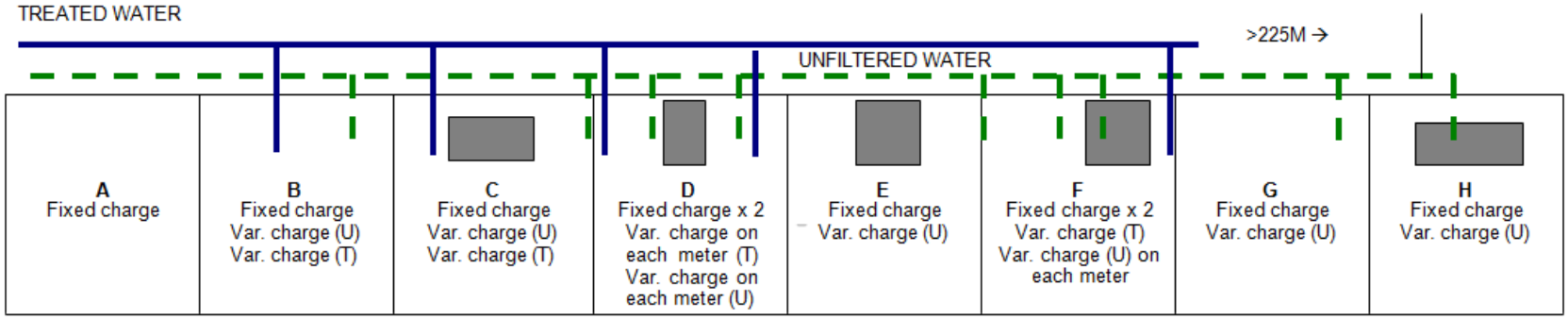

NOTE: Indicates residence or residential use with house

(T) Treated Supply
(U) Unfiltered Supply